User's Guide
SBOU089–August 2010

Multi-Cal-Master Evaluation Module

This user's guide describes the characteristics, operation, and the use of the Multi-Cal-Master evaluation module (EVM). It covers all pertinent areas involved to properly use this EVM board. The document includes the physical printed circuit board (PCB) layout, schematic diagrams, and circuit descriptions.

Contents

1 Overview 2
2 Theory of Operation for Multi-Cal-Master EVM Hardware 4
3 Bill of Materials 24

List of Figures

1 Hardware Included with the Multi-Cal-Master EVM Kit 2
2 Multi-Cal-Master System Block Diagram 4
3 Power Control Logic Circuitry Schematic 5
4 One-to-V_{OUT} Circuitry Schematic 6
5 Simplified Gate Connection for and 6
6 Current Meter Control Circuitry Schematic 7
7 Power Relay Control Circuitry Schematic 7
8 Control Signal Latch Circuitry Schematic 9
9 SPI Multiplexer Circuitry Schematic 10
10 One-Wire Signal Multiplexed to Eight Sensor Modules 11
11 Multiplexer for Voltmeter 12
12 LED Selection Performed by Decoder 13
13 Ribbon Cable Connection to Multi-Cal-Slave 14
14 Multi-Cal-Master Regulators 16
15 USB DAQ Platform Connection to Multi-Cal-Master 17
16 Power and DMM Connector Circuitry Schematic 18
17 Power-Supply Overcurrent Protection Circuitry Schematic 19
18 ±15V System Connection 20
19 Sensor Module Connection Circuitry Schematic 21

List of Tables

1 Power Control Circuitry Operating Modes 8
2 BCT Control Line Functions 13
3 Slave Ribbon Cable Pins and Functions 14
4 Signal Definitions for J102 from the USB DAQ Platform 17
5 Signal Definition for J101 from the USB DAQ Platform 18
6 J9 Power and Digital Multimeter Connections 19
7 J0: Signal Connection Summary 22
8 J1: Signal Connection Summary 23
9 Multi-Cal-Master EVM Parts List 24

I^2C is a trademark of NXP Semiconductors.
All other trademarks are the property of their respective owners.

Copyright © 2010, Texas Instruments Incorporated

1 Overview

The Multi-Cal-Master Evaluation Module is a set of EVMs that is used to calibrate multiple PGA308 sensor modules. The PGA308 is a programmable analog sensor signal conditioner. All components in the Multi-Cal-Master can be expanded to calibrate up to 64 sensors simultaneously. For a more detailed description of the PGA308, refer to the product data sheet (SBOS440) available from the Texas Instruments web site at http://www.ti.com. Additional support documents are listed in the section of this guide entitled *Related Documentation from Texas Instruments* .

The Multi-Cal-Master Evaluation Module consists of a single PCB. The complete Multi-Cal-System contains a series of PCAs, and can be expanded to meet your specific system requirements.

Throughout this document, the abbreviation *EVM* and the term *evaluation module* are synonymous with the Multi-Cal-Master Evaluation Module.

1.1 Multi-Cal-Master Hardware Options

Figure 1 shows the hardware included with the Multi-Cal-Master EVM.

The Multi-Cal-Master EVM generates and multiplexes all the signals required to calibrate the sensor modules. To use this EVM, you will need cables and an interface PCB (sold separately). The Multi-Cal-System User's Guide lists and describes all the elements required to set up the starter system (that is, a basic eight-channel system).

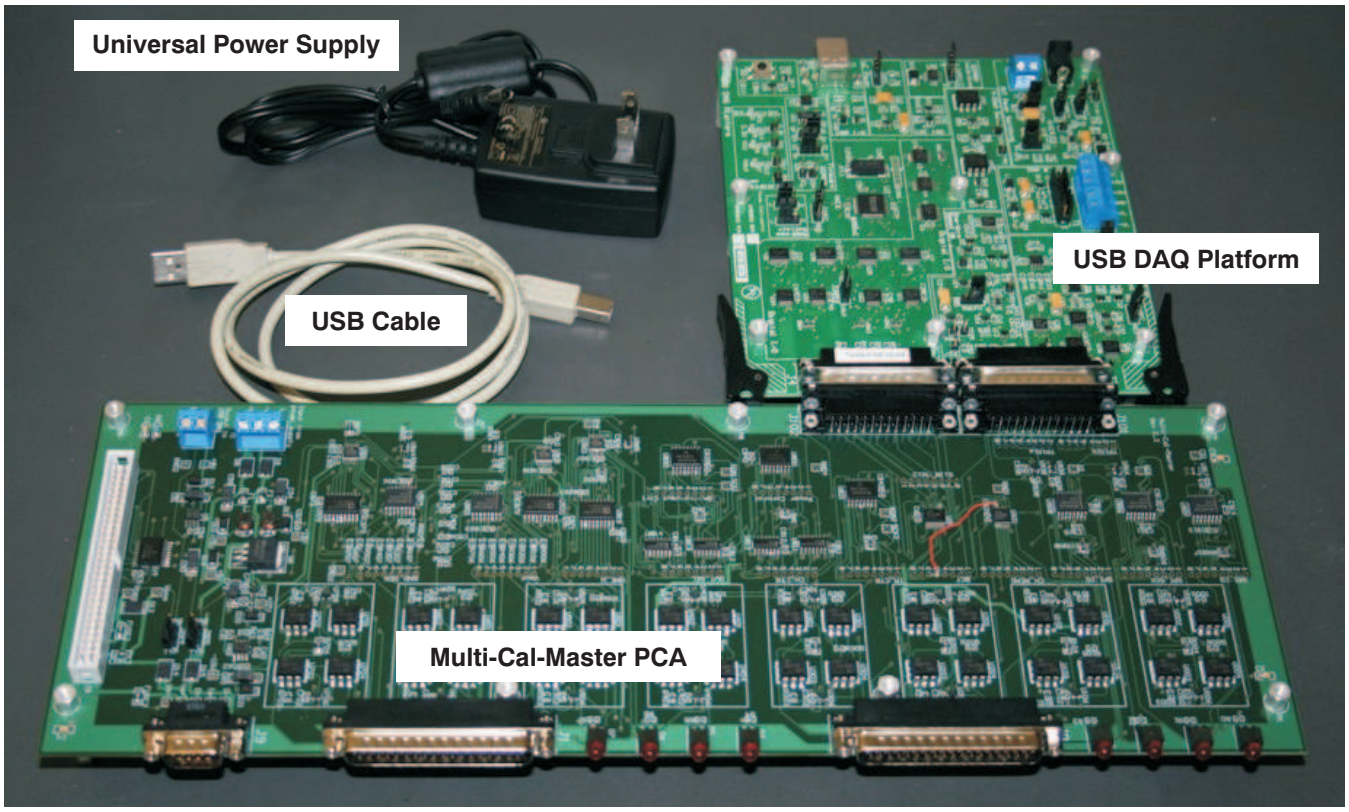

Figure 1. Hardware Included with the Multi-Cal-Master EVM Kit

Copyright © 2010, Texas Instruments Incorporated

The Multi-Cal-Master EVM kit includes the following items:

- **USB DAQ Platform:** This board connects to the USB port on your computer. It generates all the control signals and communication signals for the Multi-Cal-System.
- **Universal 9V power supply:** $9V_{DC}$, 220V/120V universal power source. (Adaptors are also provided for most major countries.)
- **USB cable:** Connects your computer to the USB DAQ Platform PCB; it is an A-Male to B-Male USB cable.
- **Multi-Cal-Master:** This board multiplexes all the communication signals, sensor module output signals, and power.

Contact the factory if any component is missing.

1.2 Related Documentation from Texas Instruments

The following documents provide information regarding Texas Instruments integrated circuits used in the assembly of the Multi-Cal-Master EVM. This user's guide is available from the TI website under literature number SBOU089. Any letter appended to the literature number corresponds to the document revision that is current at the time of the writing of this document. Newer revisions may be available from the TI web site at http://www.ti.com/, or call the Texas Instruments Literature Response Center at (800) 477-8924 or the Product Information Center at (972) 644-5580. When ordering, identify the document by both title and literature number.

Document	Literature Number
Multi-Cal-Test EVM User's Guide	SBOU088
Multi-Cal-Slave EVM User's Guide	SBOU094
USB DAQ Platform User's Guide	SBOU056
Multi-Cal-System EVM User's Guide	SBOU087
Multi-Cal-Cable User's Guide	SBOU092
Multi-Cal-Interface User's Guide	SBOU093

1.3 Information About Cautions and Warnings

This document contains caution statements.

CAUTION

This is an example of a caution statement. A caution statement describes a situation that could potentially damage your software or equipment.

The information in a caution or a warning is provided for your protection. Please read each caution carefully.

1.4 Applications Questions

If you have questions about this or other Texas Instruments evaluation modules, post a question in the *Amplifiers* forum at http://e2e.ti.com. Include in the subject heading the product in which you are interested.

Copyright © 2010, Texas Instruments Incorporated

2 Theory of Operation for Multi-Cal-Master EVM Hardware

This section discusses the operation of the Multi-Cal-Master EVM hardware.

2.1 Electrostatic Discharge Warning

Many of the components on the Multi-Cal-Master are susceptible to damage by electrostatic discharge (ESD). Customers are advised to observe proper ESD handling precautions when unpacking and handling the EVM, including the use of a grounded wrist strap at an approved ESD workstation.

CAUTION

Failure to observe ESD handling procedures may result in damage to EVM components.

2.2 Multi-Cal-Master

Figure 2 shows the block diagram of the Multi-Cal-Master. The Multi-Cal-Master multiplexes the digital communication signals from the USB DAQ Platform to eight sensor modules. The power supply and output voltage or current signals are also multiplexed.

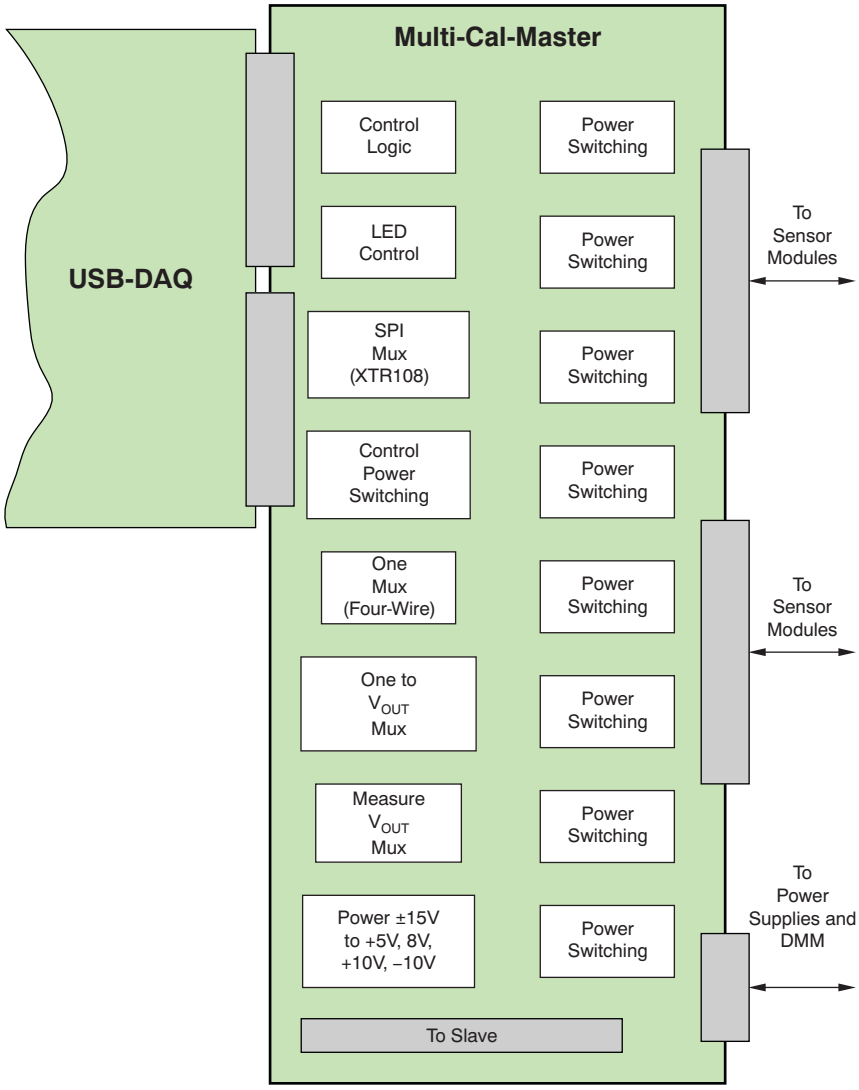

Figure 2. Multi-Cal-Master System Block Diagram

Copyright © 2010, Texas Instruments Incorporated

2.3 Control Schematics

The power supply and reference connections for the Multi-Cal-Master are illustrated in Figure 3. The output of this circuit is CH0_CTR to CH7_CTR. These control signals turn the photo MOS relays on and off. U800 is an I²C™ port expander (PCF9534) that generates the power control signals.

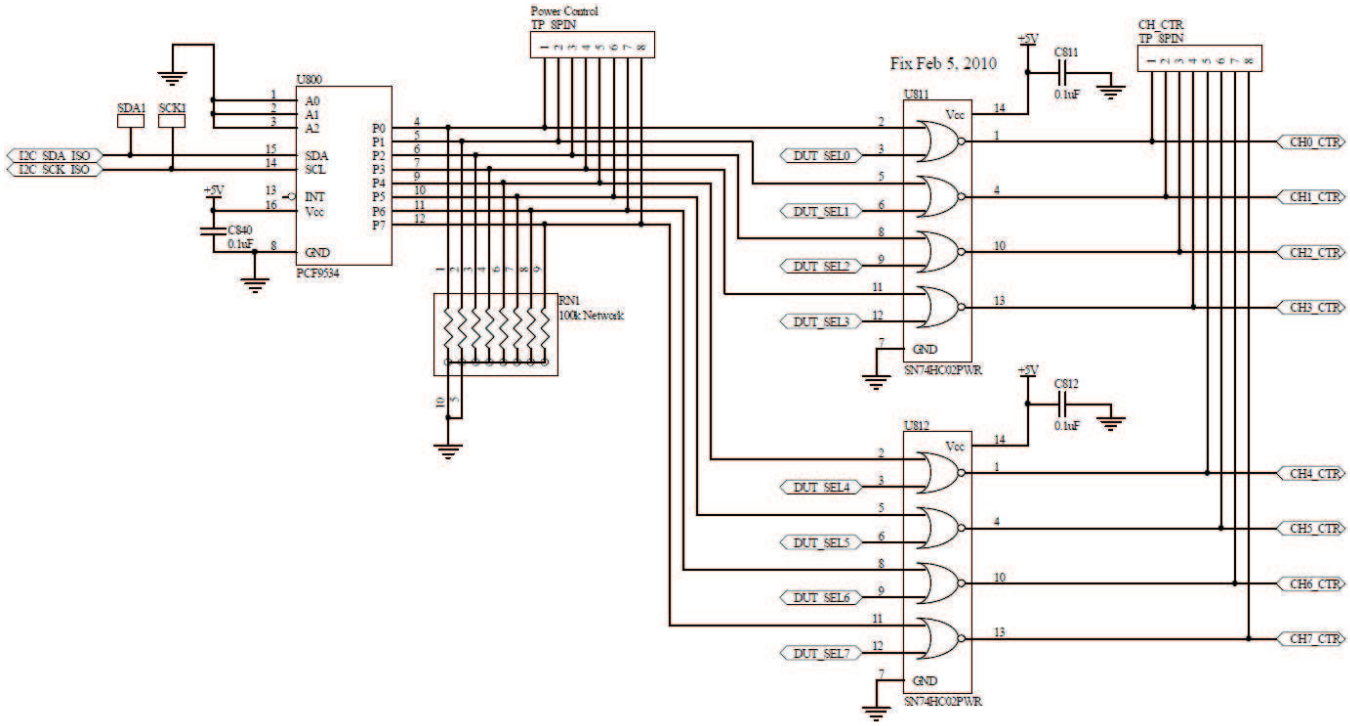

Figure 3. Power Control Logic Circuitry Schematic

Copyright © 2010, Texas Instruments Incorporated

Figure 4 shows the *One-to-V_{OUT}* control section. This section is used for three-wire modules only. In three-wire modules, the power supply must be cycled immediately before communication can occur. In a three-wire module, U820 outputs a logic high on the channel that is being tested. The V_{DUT} signal from the USB DAQ Platform is gated through to control the power on the channel being tested.

The three-wire configuration is the only configuration that requires cycling power before communications. For other circuits, U820 outputs a logic low for all channels, and *DUT_SEL* is low for all channels (disabled).

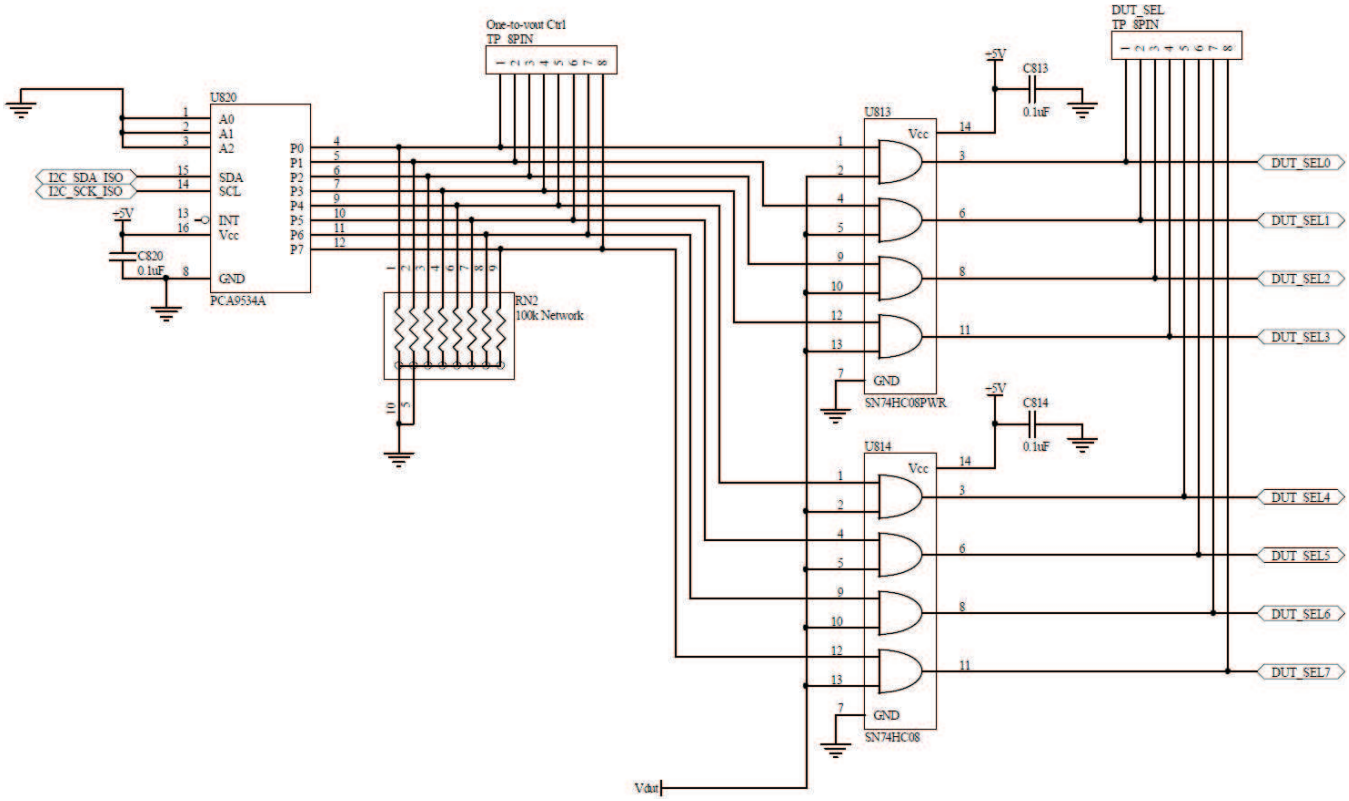

Figure 4. One-to-V_{OUT} Circuitry Schematic

Figure 5 illustrates a simplified version (that is, a single channel) of the circuits shown in Figure 3 and Figure 4. The output (CH_CTR) connects power to the sensor modules when it is low. Thus, if the power control is high, CH_CTR is low and power is connected.

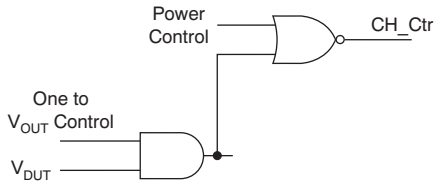

Figure 5. Simplified Gate Connection for Figure 3 and Figure 4

The AND gate is used for three-wire mode power control. In this case, V_{DUT} is used to turn the power on and off. When *Power Control* is set low and *One-to-V_{OUT}* is set high, the V_{DUT} signal is gated to CH_CTR.

Copyright © 2010, Texas Instruments Incorporated

The current meter control circuitry is shown in Figure 6. A logic low for IM_CTR connects the current meter. The current meter is only connected to one channel at a time, so one of the eight channels will be driven low.

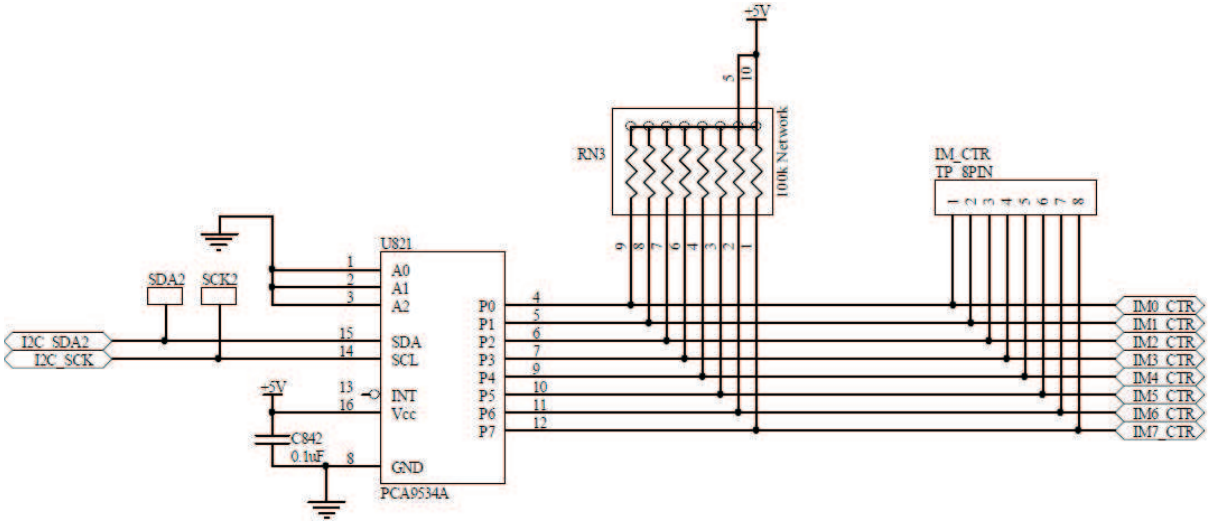

Figure 6. Current Meter Control Circuitry Schematic

Note that the current meter is only used for current output modules. Therefore, for other configurations, all of the outputs of U821 (IM_CTR) are set high.

Figure 7 shows one of the eight power relay circuits. This circuit connects and disconnects power to the sensor modules. The circuit uses photo MOS relays because of the voltage and current ratings (V_{MAX} = 60V, I_{MAX} = 600mA). Photo MOS relays are intentionally selected rather than mechanical relays because they are not affected by mechanical issues.

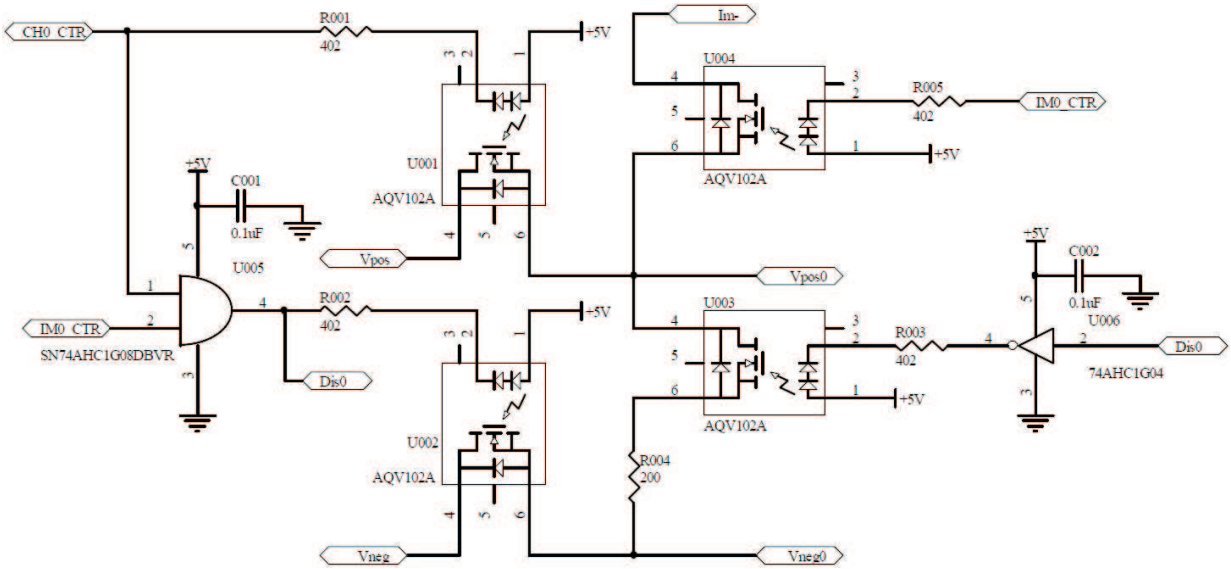

Figure 7. Power Relay Control Circuitry Schematic

As shown here, U001 and U002 are the main path for the positive and negative supply. When U001 and U002 are closed, power is delivered to the sensor module. When U001 and U002 are disconnected, U003 is used to discharge any capacitance on the power lines. U004 connects the ammeter to the path for current measurements. When the current measurement is being performed, U004 is on and U001 is off.

Copyright © 2010, Texas Instruments Incorporated

Table 1 summarizes the three modes of operation for the power control circuitry (as discussed in Figure 3 to Figure 7). Note that the current mode has three different states: current power on, current transition to measurement, and current measurement. In the current power on state all the good devices are powered. In the transition state the current meter is in parallel with the normal power supply path. In the current measurement state the normal power supply path is disconnected and the ammeter is connected for the channel that is being measured.

Table 1. Power Control Circuitry Operating Modes

Mode	Power Control (and Im Control)	One-to-V_{OUT} Control	DUT Sel	CH_CTR (and Im Control)
Three-wire	DUT = L Good Units = H Bad Units = L I_M Control = H	DUT=H All Others = L	Will be controlled by the V_{DUT} signal for the DUT. For all other devices, this is low.	Good units = L Bad Units = H DUT = NOT V_{DUT}
Four-wire	Good Units = H Bad Units = L I_M Control = H	All Units = L V_{DUT} is ignored for this mode.	All units = L. DUT Sel is not used in this mode.	Good Units = L Bad Units = H Note the relay is turned on by a low. Good units that are turned on continuously. V_{DUT} is ignored for this test.
Current Power On	Good Units = H Bad Units = L I_M Control = H	All Units = L V_{DUT} is ignored for this mode.	All units = L. DUT Sel is not used in this mode.	Good Units = L Bad Units = H Note the relay is turned on by a low. Good units that are turned on continuously. V_{DUT} is ignored for this test. No current flows through Im at this step.
Current Transition to Meas	Good Units = H Bad Units = L DUT = H I_M Control = L	All Units = L V_{DUT} is ignored for this mode.	All units = L. DUT Sel is not used in this mode.	Good Units = L Bad Units = H Note the relay is turned on by a low. Good units that are turned on continuously. V_{DUT} is ignored for this test. At this step current flows through both Im and the normal power path (that is, U001 and U004).
Current Meas	Good Units = H Bad Units = L DUT = L I_M Control = L	All Units = L V_{DUT} is ignored for this mode.	All units = L. DUT Sel is not used in this mode.	Good Units = L Bad Units = H Note the relay is turned on by a low. Good units that are turned on continuously. V_{DUT} is ignored for this test. At this step current flows through both I_M only (that is, U004).

Copyright © 2010, Texas Instruments Incorporated

The circuit shown in Figure 8 latches the control signals from the USB DAQ Platform for use on the Multi-Cal-Master. The BCT signals enable or disable different devices on the board as well as select the specific channel. Note that the same control signals are present on any slave boards used. The signal on the clock pin (EN_MAST) differentiates the master from the different slaves.

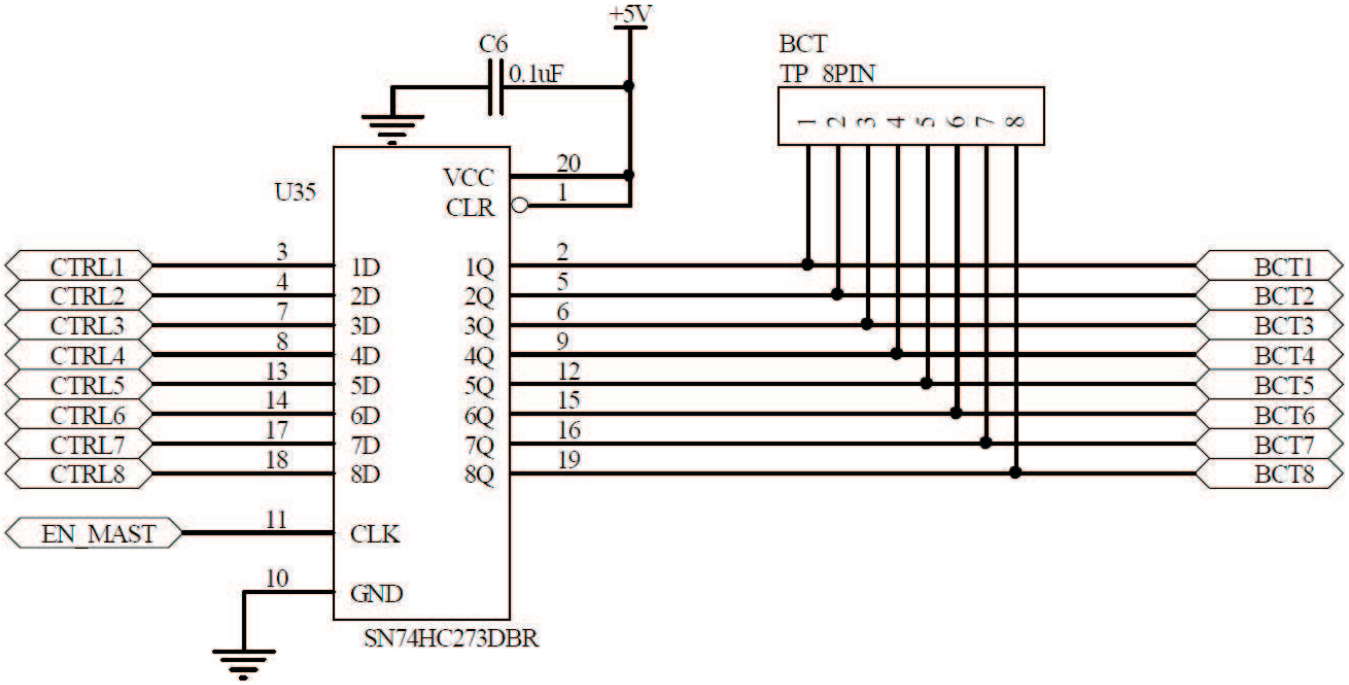

Figure 8. Control Signal Latch Circuitry Schematic

Copyright © 2010, Texas Instruments Incorporated

Figure 9 shows the SPI multiplexers. These components were developed for communications with the XTR108. They are not used on the PGA309 or PGA308. Note that these devices are selected with BCT5. BCT1 to BCT3 are used to select the channel.

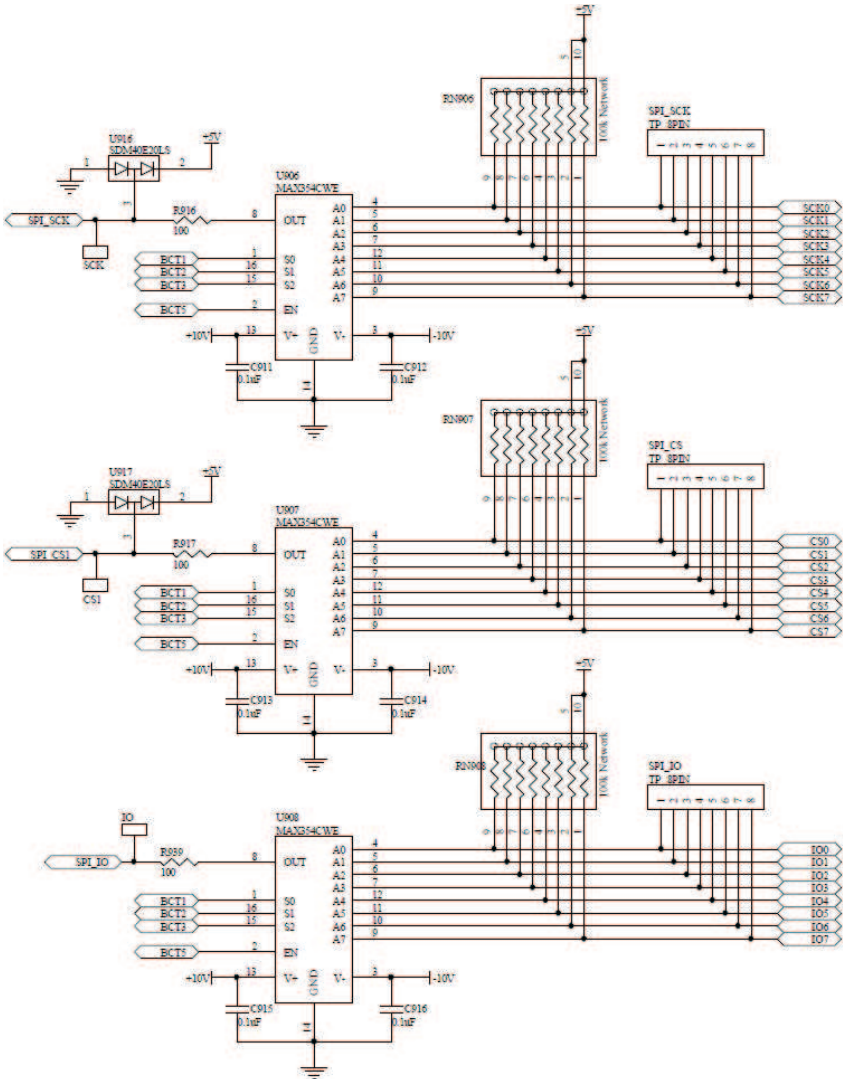

Figure 9. SPI Multiplexer Circuitry Schematic

Copyright © 2010, Texas Instruments Incorporated

Figure 10 illustrates the ONE_WIRE signal that is multiplexed to the eight sensor modules. Note that these devices are selected with BCT7. BCT1 to BCT3 are used to select the channel.

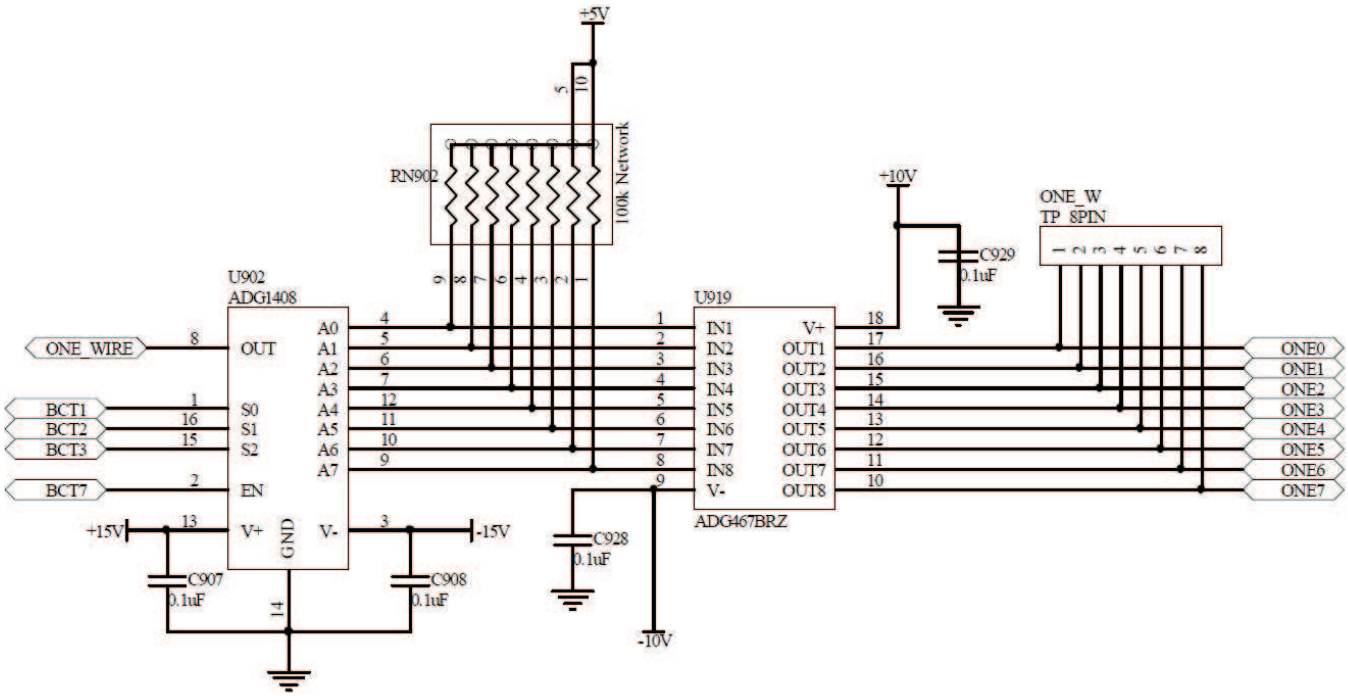

Figure 10. One-Wire Signal Multiplexed to Eight Sensor Modules

U919 is a channel protector device. This unit protects the Multi-Cal-Master from damage caused by wiring errors. For example, if the One-Wire pin on the sensor module is erroneously shorted to the power supply, the channel protector prevents damage on the Multi-Cal-Master.

Copyright © 2010, Texas Instruments Incorporated

Figure 11 shows the multiplexer for the voltmeter. U903 connects the sensor modules V_{OUT} signal to the voltmeter positive terminal. U904 connects a ground sense to the sensor module to the voltmeter negative terminal. U903and U904 are only used on voltage out modules.

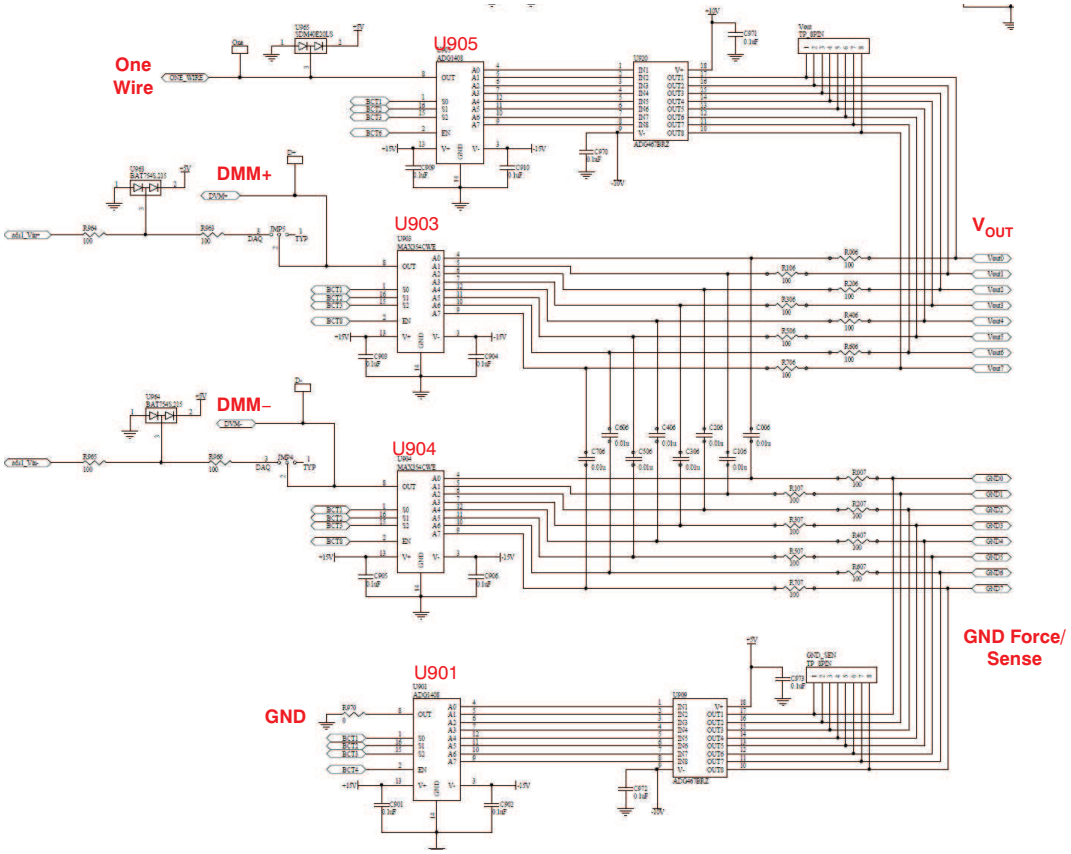

Figure 11. Multiplexer for Voltmeter

Copyright © 2010, Texas Instruments Incorporated

LEDs are used to indicate which channel is actively being calibrated. Figure 12 shows how the LED selection is performed by a 3-to-8 decoder. Note that the decoder is selected with BCT5. BCT1 to BCT3 are used to select the channel. Table 2 lists the functions of all the BCT control lines.

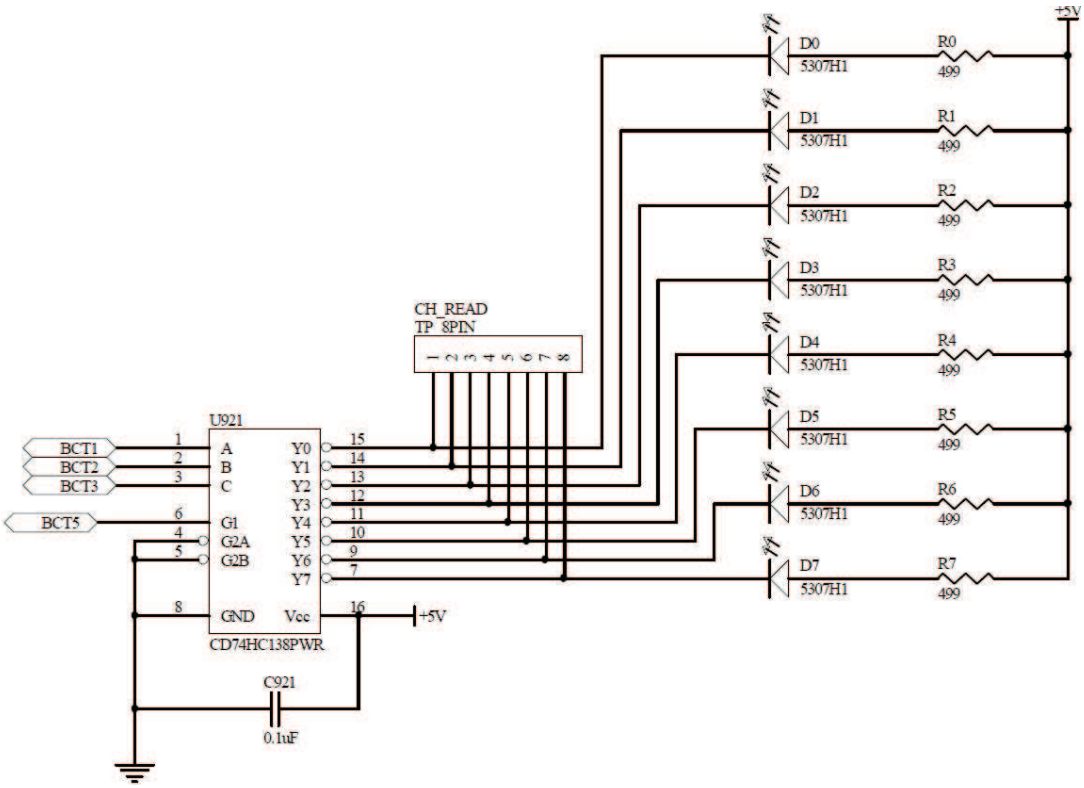

Figure 12. LED Selection Performed by Decoder

Table 2. BCT Control Line Functions

BCT Line	Devices	Function
BCT1, BCT2, BCT3	U901, U902, U903, U904, U905, U906, U907, U908,	Selects the channel (one of eight).
BCT4	U901	Ground force on current loop communication.
BCT5	U906, U907, U908, U921	SPI communication for XTR108 calibration. Also enable for LED indicators.
BCT6	U905	One wire to V_{OUT} for three wire modules.
BCT7	U902	One wire for four-wire modules and current out modules.
BCT8	U903, U904	Voltage multiplexer for voltage output modules.

Copyright © 2010, Texas Instruments Incorporated

The ribbon cable connection to the slave is shown in Figure 13. U4 is used to select the slave or master to configure. U4 generates a clock signal on a latch on the slave and each master (see U35 on figure 13). The latch output are the control signals that configure the multiplexers on the board. Table 3 lists the pins and functions of the slave ribbon cable (J8).

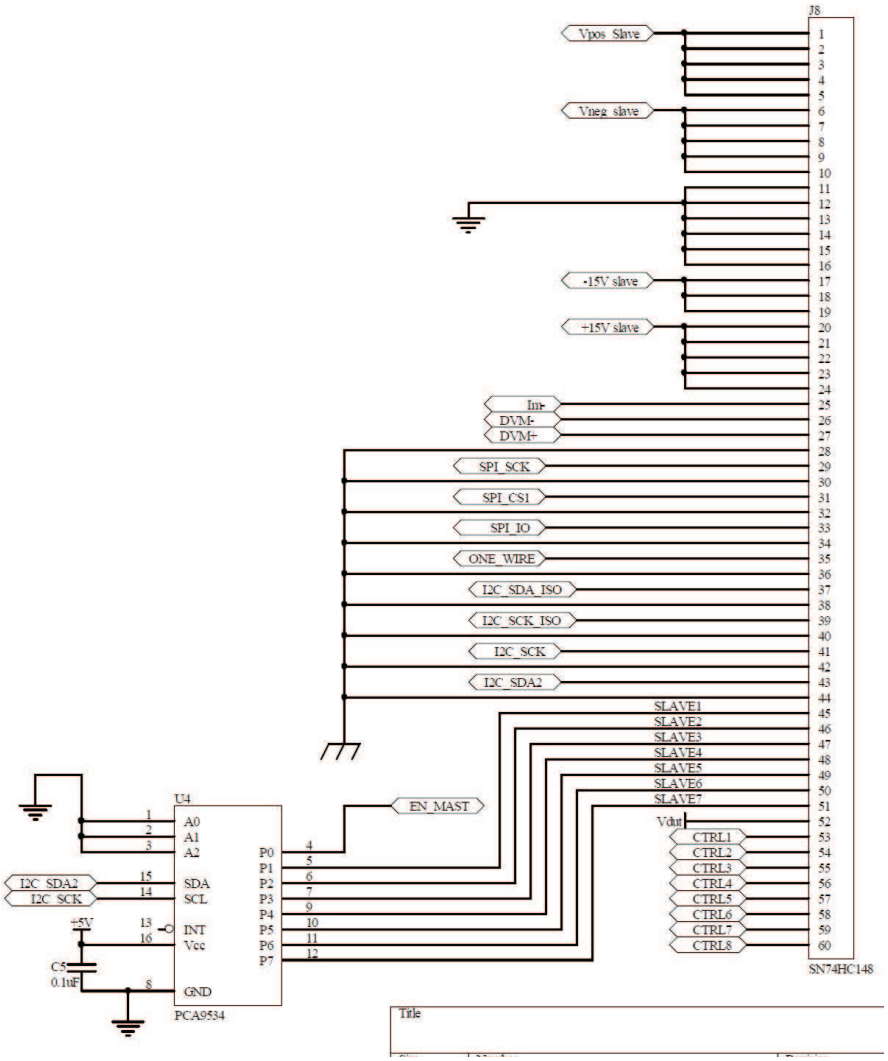

Figure 13. Ribbon Cable Connection to Multi-Cal-Slave

Table 3. Slave Ribbon Cable Pins and Functions

Pin	Signal	Function
1, 2, 3, 4, 5	V_{POS_SLAVE}	This is a direct connection to the external supply for the sensor modules. The supply voltage is connected to each slave for distribution. Each slave has it's own separate over current limit (poly fuse).
6, 7, 8, 9, 10	V_{NEG_SLAVE}	This is a direct connection to the external supply for the sensor modules. The supply voltage is connected to each slave for distribution. Each slave has it's own separate over current limit (poly fuse).
11, 12, 14, 14, 15, 16	GND	Multiple ground paths to support large currents.
17, 18, 19	–15V slave	Multiple –15V paths to support large current.

Copyright © 2010, Texas Instruments Incorporated

Table 3. Slave Ribbon Cable Pins and Functions (continued)

Pin	Signal	Function
20, 21, 22, 23, 24	+15V slave	Multiple +15V paths to support large current. Note that +15V draws significantly more current then -15V
25	I_M–	Current meter connects directly to this pin.
26	DMM–	Positive volt meter connects directly to this pin.
27	DMM+	Negative volt meter connects directly to this pin.
28	Chassis GND	Chassis ground is placed between communications lines to minimize capacitive coupling.
29	SPI_SCK	Communication for XTR108: SPI clock
30	Chassis GND	
31	SPI_CS1	Communication for XTR108: SPI chip select
32	Chassis GND	
33	SPI_IO	Communication for XTR108: SPI input / output
34	Chassis GND	
35	One Wire	UART communication used on PGA309 and PGA308
36	Chassis GND	
37	I2C_ISO_SDA	I2C SDA (channel 1): sets up port expanders on the slave
38	Chassis GND	
39	I2C_IS0_SCK	I2C SCL (channel 1): sets up port expanders on the slave
40	Chassis GND	
41	I2C_SCK	I2C SCL (channel 2): sets up port expanders on the slave
42	Chassis GND	
43	I2C_SDA2	I2C SDA (channel 2): sets up port expanders on the slave
44	Chassis GND	
45, 46, 47, 48, 49, 50, 51	SLAVE1 to	
SLAVE7	SLAVE1 to SLAVE7 are used to clock data into the latch on the selected slave.	
52	V_{DUT}	This signal from the USB DAQ is used in power supply control for three-wire voltage modules.
53, 54, 55, 56, 57, 58, 59, 60	CTRL1 to CTRL8	CTRL1 to CTRL8 are connected to a latch in each slave. The control signals are stored in the latch. The latch output controls the multiplexers on the board.

Copyright © 2010, Texas Instruments Incorporated

Figure 14 shows all the regulators on the Multi-Cal-Master. The +10V and –10V supplies are used for the supply on the channel protector devices. The channel protectors are more effective at protection with lower supplies. The 8V supply can be used to power the USB DAQ Platform rather than the universal power source. The 5V supply provides power for all the logic and photo MOS relays. The photo MOS relays draw a significant amount of power; consequently, the 5V regulator package was selected to accommodate this power requirement.

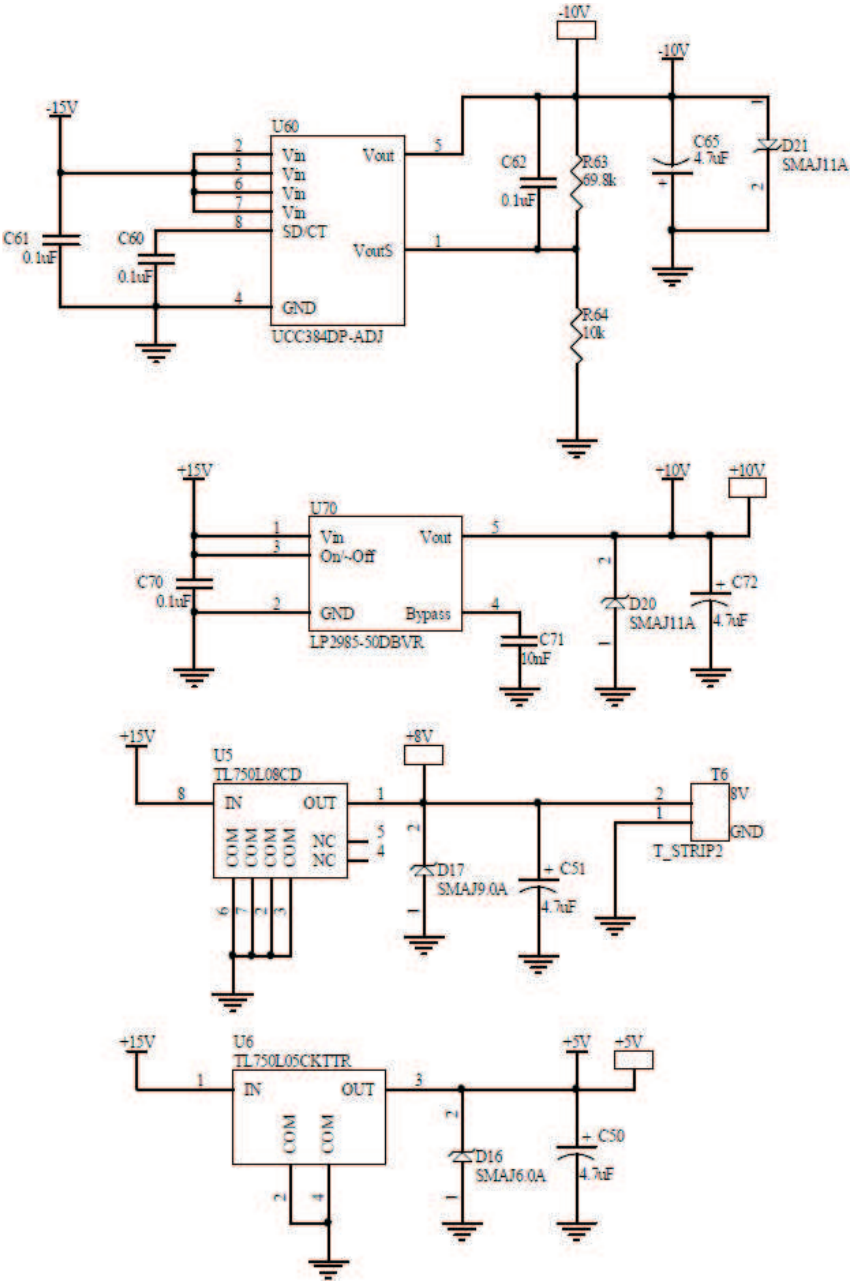

Figure 14. Multi-Cal-Master Regulators

Copyright © 2010, Texas Instruments Incorporated

The connection to the USB DAQ Platform is shown in Figure 15. Note that some of the signals are not used.

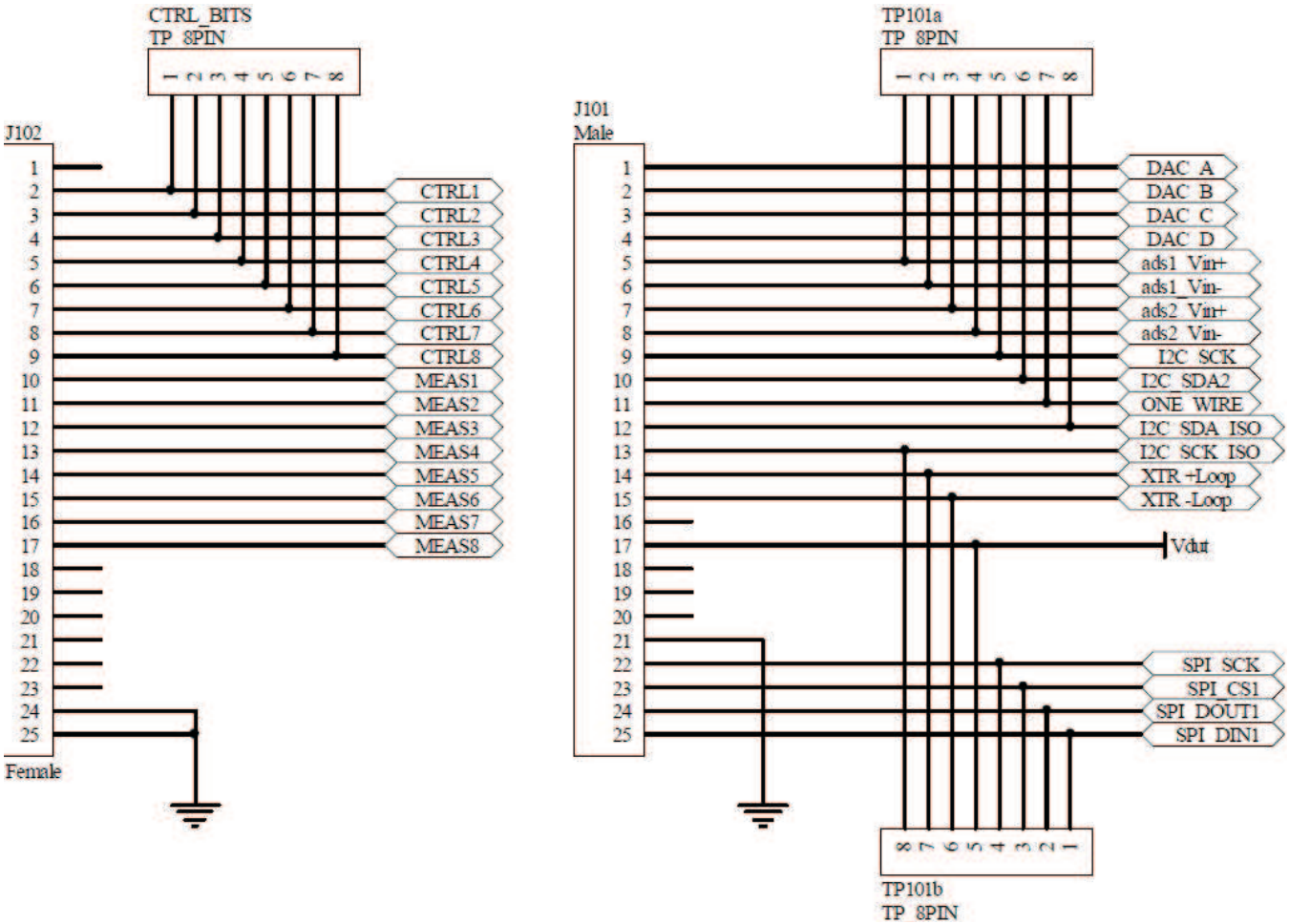

Figure 15. USB DAQ Platform Connection to Multi-Cal-Master

Table 4 and Table 5 summarize the signals that are used in J102 and J101, respectively.

Table 4. Signal Definitions for J102 from the USB DAQ Platform

Pin	Signal	Function
2 to 9	CTRL1 to CTRL8	Controls the multiplexers on the master and all slaves.
10 to 17	MEAS1 to MEAS8	Not used
24, 25	GND	System GND

Copyright © 2010, Texas Instruments Incorporated

Table 5. Signal Definition for J101 from the USB DAQ Platform

Pin	Signal	Function
1 to 4	DAC_A, DAC_B, DAC_C, DAC_D	Not used
5, 6	ads1_Vin+, ads1_Vin–	Not used
7, 8	Ads2_Vin+, ads2_Vin–	Not used
9, 10	I2C_SCK, I2C_SDA2	Used for I^2C bus expanders
11	ONE_WIRE	Used for communication to PGA309/PGA308
12, 13	I2C_SCK, I2C_SDA2	Used for I^2C bus expanders
14, 15	XTR+Loop, XTR-Loop	Not used
17	Vdut	Used to control power sequencing for three-wire modules
21	GND	System GND
22	SPI_SCK	
23	SPI_SCK	
24	SPI_SCK	
25	SPI_SCK	

Figure 16 shows the power and DMM connector for the Multi-Cal-Master. The signals connected to J9 are passed to the slave board via the ribbon cable J8.

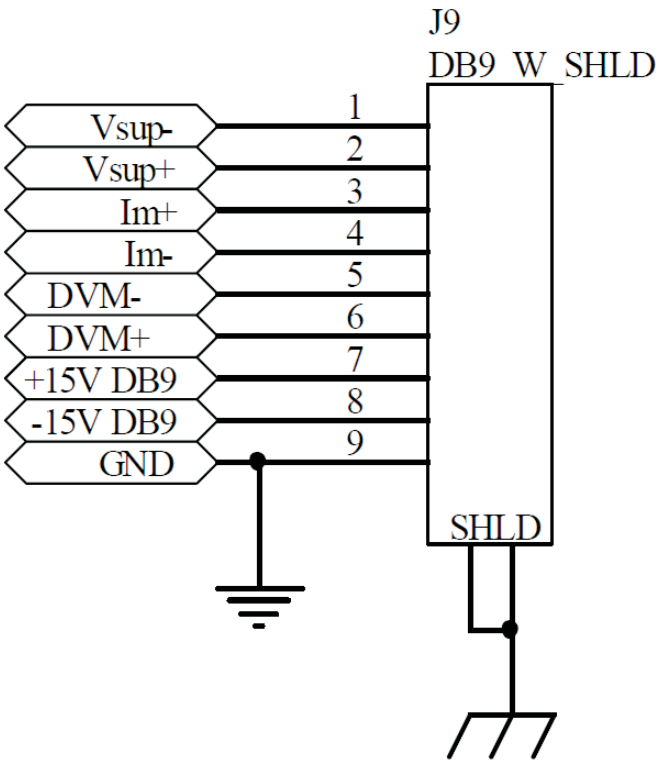

Figure 16. Power and DMM Connector Circuitry Schematic

Copyright © 2010, Texas Instruments Incorporated

Table 6 summarizes the connections to the power and DMM connector, J9.

Table 6. J9 Power and Digital Multimeter Connections

Pin	Signal	Function
1	V_{SUP-}	The negative device power supply. For voltage output modules this will be tied to ground. For current output modules this will float.
2	V_{SUP+}	The negative device power supply. Max supply is 60V. This voltage is switched internally via AQV102A.
3	I_{M+}	This is connected to the positive ammeter connection for current loop calibration. This is not used for voltage calibration.
4	I_{M-}	This is connected to the negative ammeter connection for current loop calibration. This is not used for voltage calibration.
5	DMM–	This is connected to the negative volt meter connection for current loop calibration. This is not used for current loop calibration.
6	DMM+	This is connected to the positive volt meter connection for current loop calibration. This is not used for current loop calibration.
7	+15V DB9	This supply provides power for all the components on the Multi-Cal-Master and Multi-Cal-Slave boards.
8	–15V DB9	This supply provides power for all the components on the Multi-Cal-Master and Multi-Cal-Slave boards.
9	GND	Ground for the ±15V supplies. System ground.

Figure 17 illustrates the device power-supply overcurrent protection for the Multi-Cal-Master. Fuse1 and Fuse2 are polyswitch 0.35A resetting fuses. These fuses protect the system if a sensor module is shorted. The total current requirement for the system can be significant (for example, 20mA x 64 sensors = 1.28A). The total current for each board is less than the system current (that is, 20mA x 8 sensors = 0.16A). The fuse circuit is repeated on each board so that we can set the overcurrent trip point to be relatively low (the board current is 0.16A and the trip point is 0.35A).

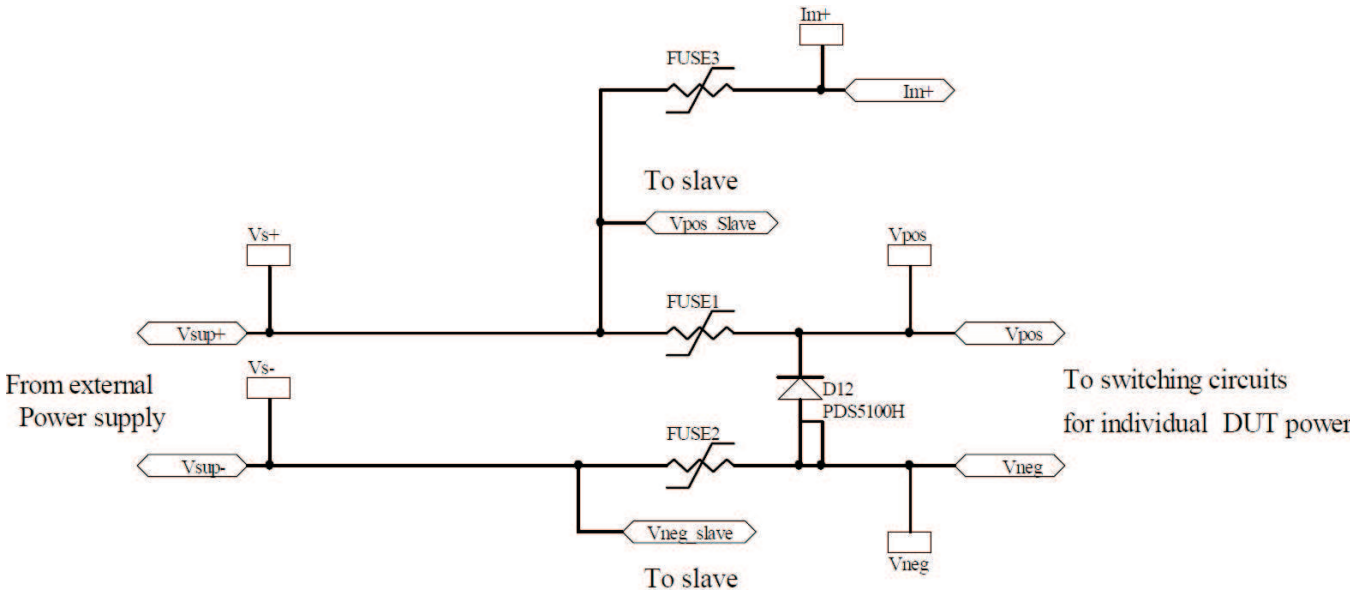

Figure 17. Power-Supply Overcurrent Protection Circuitry Schematic

Copyright © 2010, Texas Instruments Incorporated

Figure 18 illustrates the ±15V connection to the system. The ±15V supply can be connected at two different locations (T1 or J9). The ±15V supply should not be connected to both T1 and J9 simultaneously; however, the diodes protect the system from damage if both connections are made. The diodes also prevent reverse polarity connection damage.

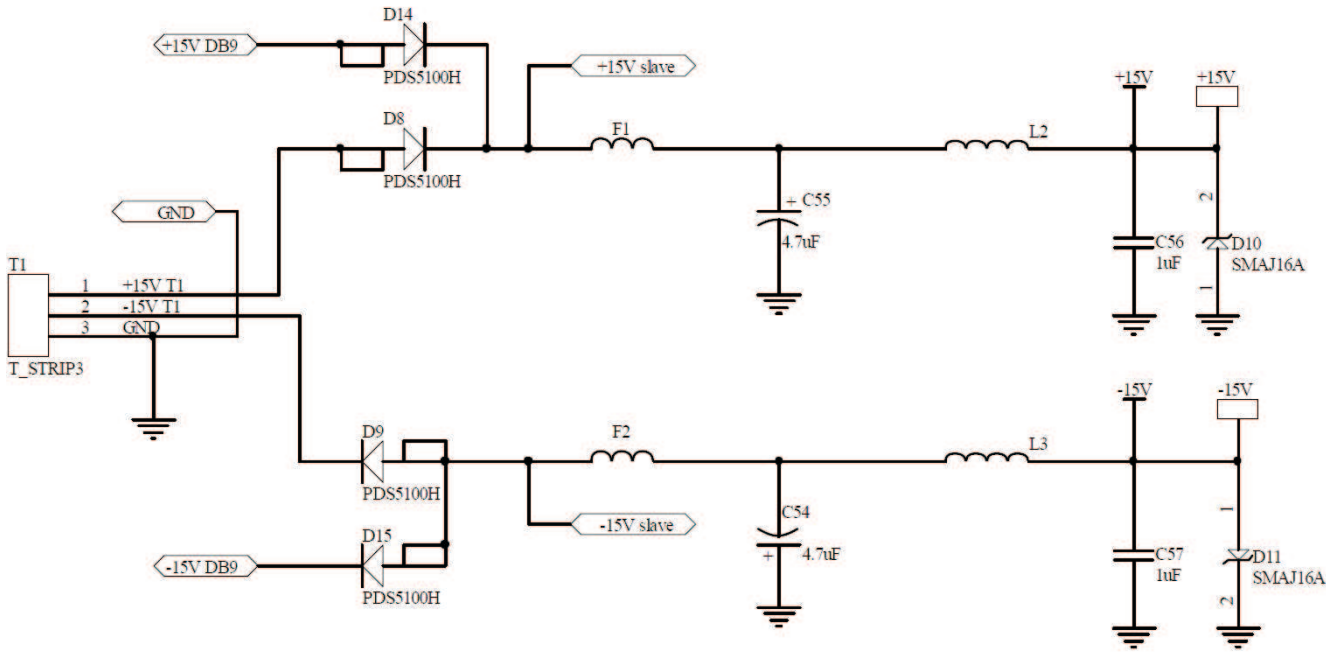

Figure 18. ±15V System Connection

The capacitors, inductors, and ferrite beads are used for power-supply noise rejection. Note that these circuits are repeated on each Multi-Cal-Slave board included in the system, so that the full system current does not flow through the coils and ferrite beads. The maximum system current for the +15V supply could be 1.6A, but the maximum current in a single master or slave is 0.2A. The current limit on the ferrite beads and coils is set according to the board requirements, not the system requirements.

Copyright © 2010, Texas Instruments Incorporated

Figure 19 shows the connectors that connect to the sensor modules. Each connector connects to four modules. Some of the signals on this connector are used for the XTR108 calibration and some are used for the PGA309/PGA308.

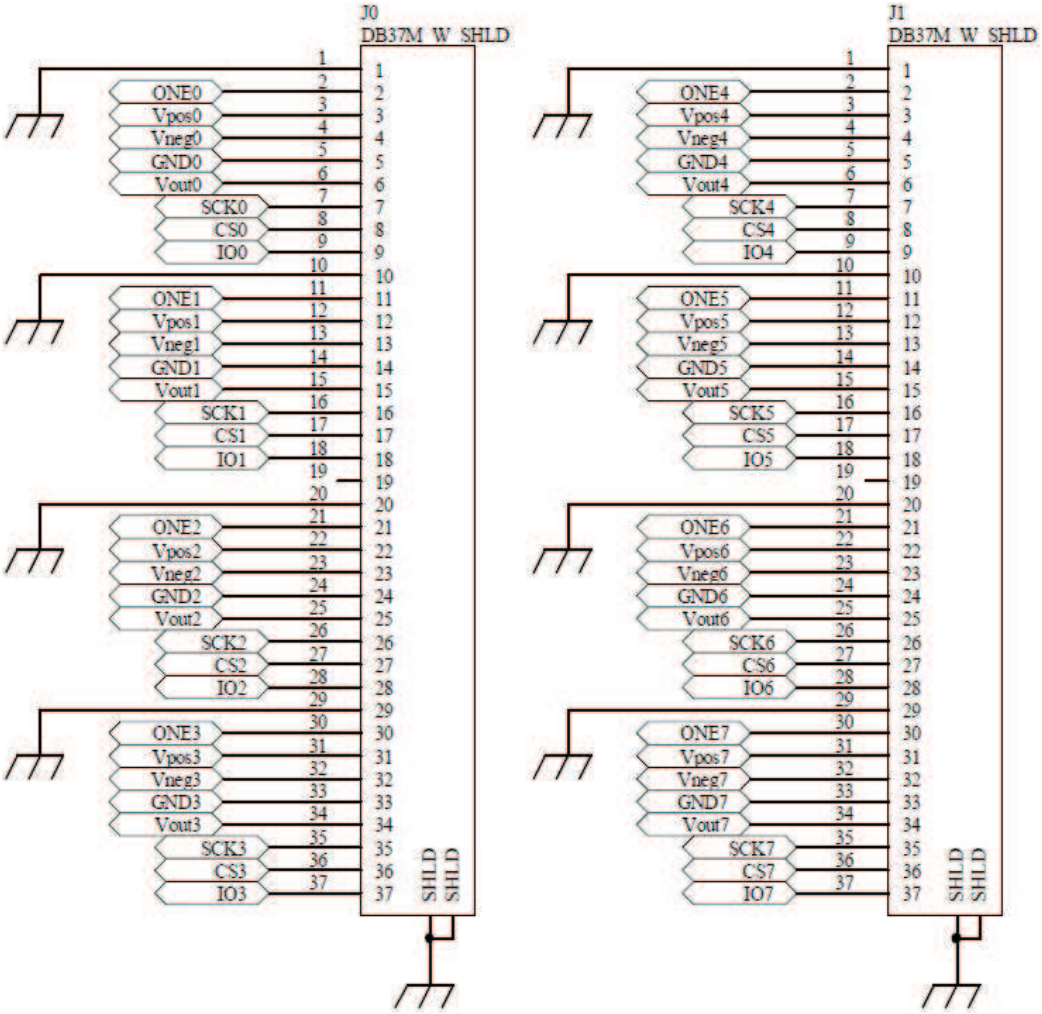

Figure 19. Sensor Module Connection Circuitry Schematic

Copyright © 2010, Texas Instruments Incorporated

Table 7 and Table 8 summarize the signals on J0 and J1, respectively.

Table 7. J0: Signal Connection Summary

Pin J0	Signal	Function on J0
1	Chassis ground	Chassis ground
2	One0	One wire digital communication line.
3	Pos0	Positive device supply.
4	Neg0	Negative device supply.
5	GND0	Ground force for current modules. Ground sense for voltage modules.
6	$V_{OUT}0$	Output voltage measurement.
7	SCK0	SPI SCK for XTR108.
8	CS0	SPI CS0 for XTR108
9	IO0	SPI Input / Output for XTR108
10	Chassis ground	Pins 10 to 18 repeat the function of pins 1 to 9 for channel 2
11	One1	
12	Pos1	
13	Neg1	
14	GND1	
15	$V_{OUT}1$	
16	SCK1	
17	CS1	
18	IO1	
19	—	No connection
20	Chassis ground	Pins 20 to 28 repeat the function of pins 1 to 9 for channel 3
21	One2	
22	Pos2	
23	Neg2	
24	GND2	
25	$V_{OUT}2$	
26	SCK2	
27	CS2	
28	IO2	
29	Chassis ground	Pins 29 to 37 repeat the function of pins 1 to 9 for channel 4
30	One3	
31	Pos3	
32	Neg3	
33	GND3	
34	$V_{OUT}3$	
35	SCK3	
36	CS3	
37	IO3	

Copyright © 2010, Texas Instruments Incorporated

Table 8. J1: Signal Connection Summary

Pin J1	Signal	Function on J1
1	Chassis ground	Chassis ground
2	One4	One wire digital communication line.
3	Pos4	Positive device supply.
4	Neg4	Negative device supply.
5	GND4	Ground force for current modules. Ground sense for voltage modules.
6	$V_{OUT}4$	Output voltage measurement.
7	SCK4	SPI SCK for XTR108.
8	CS4	SPI CS0 for XTR108
9	IO4	SPI Input / Output for XTR108
10	Chassis ground	Pins 10 to 18 repeat the function of pins 1 to 9 for channel 2
11	One5	
12	Pos5	
13	Neg5	
14	GND5	
15	$V_{OUT}5$	
16	SCK5	
17	CS5	
18	IO5	
19	—	No connection
20	Chassis ground	Pins 20 to 28 repeat the function of pins 1 to 9 for channel 3
21	One6	
22	Pos6	
23	Neg6	
24	GND6	
25	$V_{OUT}6$	
26	SCK6	
27	CS6	
28	IO6	
29	Chassis ground	Pins 29 to 37 repeat the function of pins 1 to 9 for channel 4
30	One7	
31	Pos7	
32	Neg7	
33	GND7	
34	$V_{OUT}t7$	
35	SCK7	
36	CS7	
37	IO7	

Copyright © 2010, Texas Instruments Incorporated

3 Bill of Materials

Table 9 shows the parts list for the Multi-Cal-Master EVM.

Table 9. Multi-Cal-Master EVM Parts List

Qty	Ref Des	Description	Vendor	Part Number
9	C006, C106, C206, C306, C406, C506, C606, C706, C71	Capacitor, 10000pF 50V ceramic X7R 0603	Kemet	C0603C103K5RACTU
53	C6, C5, C60, C61, C62, C840, C842, C907, C908, C909, C910, C901, C902, C903, C904, C905, C906, C911, C912, C913, C914, C915, C916, C921, C928, C929, C938, C970, C971, C972, C973, C001, C002, C101, C102, C201, C202, C301, C302, C401, C402, C501, C502, C601, C602, C701, C702, C811, C812, C813, C814, C820, C70	Capacitor, .10µF 25V ceramic Y5V 0603	Kemet	C0603C104M3VACTU
2	C56, C57	Capacitor, ceramic 1µF 25V X5R 0603	Murata Electronics North America	GRM188R61E105KA12D
6	C54, C55, C50, C51, C65, C72	Capacitor, tantalum 4.7µF 35V 20% SMD	Nichicon	F931V475MCC
4	C1, C2, C3, C4	Capacitor, ceramic .01µF 10% 1000V X7R 1206	Vishay/Vitramon	VJ1206Y103KXGAT5Z
1	R938	Resistor, 49.9 kΩ 1/10W 1% 0603 SMD	Panasonic - ECG	ERJ-3EKF4992V
1	R8	Resistor, 1MΩ 1% 1206 TF high voltage	Stackpole Electronics Inc	HVCB 1206 T2 1M 1% I
8	R0, R1, R2, R3, R4, R5, R6, R7	Resistor, 499Ω 1/10W 1% 603 SMD	Panasonic - ECG	ERJ-3EKF4990V
23	R006, R106, R206, R306, R406, R506, R606, R706, R007, R107, R207, R307, R407, R507, R607, R707,R939, R917, R916, R963, R964, R965, R966	Resistor, 100Ω 1/10W 5% 0603 SMD	Stackpole Electronics Inc	RMCF 1/16 100 5% R
8	R004, R104, R204, R304, R404, R504, R604, R704,	Resistor, 200Ω 1/4W 5% 1206 SMD	Stackpole Electronics Inc	RMCF 1/8 200 5% R

Copyright © 2010, Texas Instruments Incorporated

Table 9. Multi-Cal-Master EVM Parts List (continued)

Qty	Ref Des	Description	Vendor	Part Number
32	R001, R002, R003, R005, R101, R102, R103, R105, R201, R202, R203, R205, R301, R302, R303, R305, R401, R402, R403, R405, R501, R502, R503, R505, R601, R602, R603, R605, R701, R702 ,R703, R705	Resistor, 402Ω 1/10W 1% 0603 SMD	Panasonic - ECG	ERJ-3EKF4020V
1	R64	Resistor, 10kΩ 1/10W 1% 0603 SMD	Stackpole Electronics Inc	RMCF 1/16 10K 1% R
1	R63	Resistor, 69.8kΩ 1/10W 1% 0603 SMD	Yageo	RC0603FR-0769K8L
7	RN1, RN2, RN3, RN902, RN906, RN907, RN908	Resistor, array 100kΩ 10 TRM BSS SMD	CTS Resistor Products	746X101104JP
1	R970	Resistor, 0.0Ω 1/4W 5% 1206 SMD	Vishay/Dale	CRCW12060000Z0EA
3	U901, U902, U905	IC, SW mux analog 1/8CH 16-TSSOP	Analog Devices Inc	ADG1408YRUZ
5	U903, U904, U906, U907, U908	IC, Multiplexer 8x1 16-SOIC	Maxim	MAX354CWE
3	U919, U920, U909	IC, Channel protector OCTAL 18-SOIC	Analog Devices Inc	ADG467BRZ
32	U001, U002, U003, U004, U101, U102, U103, U104, U201, U202, U203, U204, U301, U302, U303, U304, U401, U402, U403, U404, U501, U502, U503, U504, U601, U602, U603, U604, U701, U702, U703, U704,	Relay opto dc 60V 600MA 6-SMD	Panasonic Electric Works	AQV102A
6	U963, U964, U965, U916, U917, U939	Diode, schottky 30V 200mA SOT23-3	NXP Semiconductors	BAT754S,215
2	U800, U4	IC, I/O Expander I^2C 8B 16-SOIC	Texas Instruments	PCA9534DWR
2	U820, U821	IC, I/O Expander I^2C 8B 16-SOIC	Texas Instruments	PCA9534ADWR
1	U938	IC, Buff/DVR non-invert SOT23-5	Texas Instruments	SN74LVC1G07DBVR
1	U70	IC, LDO Reg 10V 150mA SOT23-5	Texas Instruments	LP2985A-10DBVR
1	U921	IC, 3-to-8 decoder/demux 16-SSOP	Texas Instruments	SN74HC138DBR
1	U60	IC, .5A Neg adj lin LDO Reg 8-SOIC	Texas Instruments	UCC384DP-ADJ
1	U6	IC, LDO Reg 150mA 5V D2PAK-3 TO-263	Texas Instruments	TL750L05CKTTR
1	U5	IC, 8V 150mA LDO Reg 8-SOIC	Texas Instruments	TL750L08CD
8	U005, U105, U205, U305, U405, U505, U605, U705	IC, Single 2in pos-AND gate SOT23-5	Texas Instruments	SN74AHC1G08DBVR

Copyright © 2010, Texas Instruments Incorporated

Table 9. Multi-Cal-Master EVM Parts List (continued)

Qty	Ref Des	Description	Vendor	Part Number
8	U006, U106, U206, U306, U406, U506, U606, U706	IC, Single inverter gate SOT23-5	Texas Instruments	SN74AHC1G04DBVR
2	U811, U812	IC, Quad 2-In NOR gate 14-SOIC	Texas Instruments	SN74HC02D
2	U813, U814	IC, Quad 2-Input AND l 14-SOIC	Texas Instruments	SN74HC08D
1	U35	IC, Oct D-type f-f w/Clr 20-SSOP	Texas Instruments	SN74HC273DBR
8	U005, U105, U205, U305, U405, U505, U605, U705	IC, Single 2-in pos-AND gate SOT23-5	Texas Instruments	SN74AHC1G08DBVR
8	U006, U106, U206, U306, U406, U506, U606, U706	IC, Single inverter gate SOT23-5	Texas Instruments	SN74AHC1G04DBVR
2	U811, U812	IC, Quad 2-Il NOR gate 14-SOIC	Texas Instruments	SN74HC02D
2	U813, U814	IC, Quad 2-Input AND gate 14-SOIC	Texas Instruments	SN74HC08D
1	U35	IC, Oct D-type F-F W/CLR 20-SSOP	Texas Instruments	SN74HC273DBR
8	D0, D1, D2, D3, D4, D5, D6, D7	LED, red T1-3/4 right angle PCB	CML Innovative Technologies	5307H1
2	D10, D11	Diode TVS 16V 400W unidirectional 5% SMA	Littelfuse Inc	SMAJ16A
2	D20, D21	TVS 400W 11V unidirectional SMA	Littelfuse Inc	SMAJ11A-TP
1	D17	Diode TVS 9.0V 400W unidirectional 5% SMA	Littelfuse Inc	SMAJ9.0A
1	D16	DITVS 6.0V 400W unidirectional 5% SMA	Littelfuse Inc	SMAJ6.0A
5	D12, D8, D9, D14, D15	Diode Schottky 100V 5A powerDI5	Diodes Inc	PDS5100H-13
3	Fuse1, Fuse2, Fuse3	Polyswitch .35A reset fuse SMD	Tyco Electronics	NANOSMDC035F-2
2	L2, L3	Inductor, unshielded 100µH .52A SMD	JW Miller A Bourns Company	PM54-101K-RC
2	F1, F2	Ferrite chip 120Ω 3000mA 1206	Murata Electronics North America	BLM31PG121SN1
2	J0, J1	Connector, DB37 male .318" R/A nickeL	Norcomp Inc.	182-037-113R531
1	J9	Connector, DSUB plug R/A 9pos gold/FL	AMP/Tyco Electronics	1734352-1
1	J102	Connector, DSUB rcpt R/A 25pos 30 gold (with threaded inserts and board locks)	AMP/Tyco Electronics	5747846-4
1	J101	Connector, DSUB plug R/A 25pos 30 gold (with threaded inserts and board locks)	AMP/Tyco Electronics	5747842-4
1	J8	Connector, Header low-Pro 60-POS gold	Assmann Electronics Inc	AWHW60G-0202-T-R
8	CH_ON, CH_OFF, MBIT, SPI_SCK, SPI_CS, SPI_IO, ONE, V_{OUT}, GND_SEN	Connector	Omit	Omit
4	JMP1, JMP2, JMP4, JMP4	Header, 3-position 0.100" SGL Gold	Samtec	TSW-103-07-G-S
4	JMP1, JMP2, JMP4, JMP5	Shunt LP w/handle 2 POS 30AU	Tyco Electronics	881545-2
1	T1	Terminal block 5MM 3POS	ON SHORE TECHNOLOGY	ED300/3
1	T6	Terminal block 5MM 2POS	ON SHORE TECHNOLOGY	ED300/2

Copyright © 2010, Texas Instruments Incorporated

Table 9. Multi-Cal-Master EVM Parts List (continued)

Qty	Ref Des	Description	Vendor	Part Number
16	M1-M8 and USB DAQ Standoffs (bottom)	Standoff hex M/F 4-40 1.125"ALUM	Keystone Electronics	8406
16	M1-M8 and USB DAQ Standoffs (top)	Standoff hex 4-40THR ALUM .250"	Keystone Electronics	2201
6	Use on J0, J1, J9	Female screwlock 4-40 .312"	Norcomp Inc.	SFSO4401NR

Copyright © 2010, Texas Instruments Incorporated

Evaluation Board/Kit Important Notice

Texas Instruments (TI) provides the enclosed product(s) under the following conditions:

This evaluation board/kit is intended for use for **ENGINEERING DEVELOPMENT, DEMONSTRATION, OR EVALUATION PURPOSES ONLY** and is not considered by TI to be a finished end-product fit for general consumer use. Persons handling the product(s) must have electronics training and observe good engineering practice standards. As such, the goods being provided are not intended to be complete in terms of required design-, marketing-, and/or manufacturing-related protective considerations, including product safety and environmental measures typically found in end products that incorporate such semiconductor components or circuit boards. This evaluation board/kit does not fall within the scope of the European Union directives regarding electromagnetic compatibility, restricted substances (RoHS), recycling (WEEE), FCC, CE or UL, and therefore may not meet the technical requirements of these directives or other related directives.

Should this evaluation board/kit not meet the specifications indicated in the User's Guide, the board/kit may be returned within 30 days from the date of delivery for a full refund. THE FOREGOING WARRANTY IS THE EXCLUSIVE WARRANTY MADE BY SELLER TO BUYER AND IS IN LIEU OF ALL OTHER WARRANTIES, EXPRESSED, IMPLIED, OR STATUTORY, INCLUDING ANY WARRANTY OF MERCHANTABILITY OR FITNESS FOR ANY PARTICULAR PURPOSE.

The user assumes all responsibility and liability for proper and safe handling of the goods. Further, the user indemnifies TI from all claims arising from the handling or use of the goods. Due to the open construction of the product, it is the user's responsibility to take any and all appropriate precautions with regard to electrostatic discharge.

EXCEPT TO THE EXTENT OF THE INDEMNITY SET FORTH ABOVE, NEITHER PARTY SHALL BE LIABLE TO THE OTHER FOR ANY INDIRECT, SPECIAL, INCIDENTAL, OR CONSEQUENTIAL DAMAGES.

TI currently deals with a variety of customers for products, and therefore our arrangement with the user **is not exclusive.**

TI assumes **no liability for applications assistance, customer product design, software performance, or infringement of patents or services described herein.**

Please read the User's Guide and, specifically, the Warnings and Restrictions notice in the User's Guide prior to handling the product. This notice contains important safety information about temperatures and voltages. For additional information on TI's environmental and/or safety programs, please contact the TI application engineer or visit www.ti.com/esh.

No license is granted under any patent right or other intellectual property right of TI covering or relating to any machine, process, or combination in which such TI products or services might be or are used.

FCC Warning

This evaluation board/kit is intended for use for **ENGINEERING DEVELOPMENT, DEMONSTRATION, OR EVALUATION PURPOSES ONLY** and is not considered by TI to be a finished end-product fit for general consumer use. It generates, uses, and can radiate radio frequency energy and has not been tested for compliance with the limits of computing devices pursuant to part 15 of FCC rules, which are designed to provide reasonable protection against radio frequency interference. Operation of this equipment in other environments may cause interference with radio communications, in which case the user at his own expense will be required to take whatever measures may be required to correct this interference.

EVM Warnings and Restrictions

It is important to operate this EVM within the input voltage range of 5.7V to 9V and the output voltage range of 0V to 5V.

Exceeding the specified input range may cause unexpected operation and/or irreversible damage to the EVM. If there are questions concerning the input range, please contact a TI field representative prior to connecting the input power.

Applying loads outside of the specified output range may result in unintended operation and/or possible permanent damage to the EVM. Please consult the EVM User's Guide prior to connecting any load to the EVM output. If there is uncertainty as to the load specification, please contact a TI field representative.

During normal operation, some circuit components may have case temperatures greater than +25°C. The EVM is designed to operate properly with certain components above +25°C as long as the input and output ranges are maintained. These components include but are not limited to linear regulators, switching transistors, pass transistors, and current sense resistors. These types of devices can be identified using the EVM schematic located in the EVM User's Guide. When placing measurement probes near these devices during operation, please be aware that these devices may be very warm to the touch.

Mailing Address: Texas Instruments, Post Office Box 655303, Dallas, Texas 75265
Copyright © 2010, Texas Instruments Incorporated

IMPORTANT NOTICE

Texas Instruments Incorporated and its subsidiaries (TI) reserve the right to make corrections, modifications, enhancements, improvements, and other changes to its products and services at any time and to discontinue any product or service without notice. Customers should obtain the latest relevant information before placing orders and should verify that such information is current and complete. All products are sold subject to TI's terms and conditions of sale supplied at the time of order acknowledgment.

TI warrants performance of its hardware products to the specifications applicable at the time of sale in accordance with TI's standard warranty. Testing and other quality control techniques are used to the extent TI deems necessary to support this warranty. Except where mandated by government requirements, testing of all parameters of each product is not necessarily performed.

TI assumes no liability for applications assistance or customer product design. Customers are responsible for their products and applications using TI components. To minimize the risks associated with customer products and applications, customers should provide adequate design and operating safeguards.

TI does not warrant or represent that any license, either express or implied, is granted under any TI patent right, copyright, mask work right, or other TI intellectual property right relating to any combination, machine, or process in which TI products or services are used. Information published by TI regarding third-party products or services does not constitute a license from TI to use such products or services or a warranty or endorsement thereof. Use of such information may require a license from a third party under the patents or other intellectual property of the third party, or a license from TI under the patents or other intellectual property of TI.

Reproduction of TI information in TI data books or data sheets is permissible only if reproduction is without alteration and is accompanied by all associated warranties, conditions, limitations, and notices. Reproduction of this information with alteration is an unfair and deceptive business practice. TI is not responsible or liable for such altered documentation. Information of third parties may be subject to additional restrictions.

Resale of TI products or services with statements different from or beyond the parameters stated by TI for that product or service voids all express and any implied warranties for the associated TI product or service and is an unfair and deceptive business practice. TI is not responsible or liable for any such statements.

TI products are not authorized for use in safety-critical applications (such as life support) where a failure of the TI product would reasonably be expected to cause severe personal injury or death, unless officers of the parties have executed an agreement specifically governing such use. Buyers represent that they have all necessary expertise in the safety and regulatory ramifications of their applications, and acknowledge and agree that they are solely responsible for all legal, regulatory and safety-related requirements concerning their products and any use of TI products in such safety-critical applications, notwithstanding any applications-related information or support that may be provided by TI. Further, Buyers must fully indemnify TI and its representatives against any damages arising out of the use of TI products in such safety-critical applications.

TI products are neither designed nor intended for use in military/aerospace applications or environments unless the TI products are specifically designated by TI as military-grade or "enhanced plastic." Only products designated by TI as military-grade meet military specifications. Buyers acknowledge and agree that any such use of TI products which TI has not designated as military-grade is solely at the Buyer's risk, and that they are solely responsible for compliance with all legal and regulatory requirements in connection with such use.

TI products are neither designed nor intended for use in automotive applications or environments unless the specific TI products are designated by TI as compliant with ISO/TS 16949 requirements. Buyers acknowledge and agree that, if they use any non-designated products in automotive applications, TI will not be responsible for any failure to meet such requirements.

Following are URLs where you can obtain information on other Texas Instruments products and application solutions:

Products		**Applications**	
Amplifiers	amplifier.ti.com	Audio	www.ti.com/audio
Data Converters	dataconverter.ti.com	Automotive	www.ti.com/automotive
DLP® Products	www.dlp.com	Communications and Telecom	www.ti.com/communications
DSP	dsp.ti.com	Computers and Peripherals	www.ti.com/computers
Clocks and Timers	www.ti.com/clocks	Consumer Electronics	www.ti.com/consumer-apps
Interface	interface.ti.com	Energy	www.ti.com/energy
Logic	logic.ti.com	Industrial	www.ti.com/industrial
Power Mgmt	power.ti.com	Medical	www.ti.com/medical
Microcontrollers	microcontroller.ti.com	Security	www.ti.com/security
RFID	www.ti-rfid.com	Space, Avionics & Defense	www.ti.com/space-avionics-defense
RF/IF and ZigBee® Solutions	www.ti.com/lprf	Video and Imaging	www.ti.com/video
		Wireless	www.ti.com/wireless-apps

Mailing Address: Texas Instruments, Post Office Box 655303, Dallas, Texas 75265
Copyright © 2010, Texas Instruments Incorporated